BAR MENU

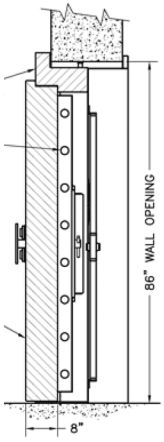

nocellara olives v/gf	3
sourdough, oil v	4.5
sweet potato fries gf	4.5
fries gf	3

charcuterie & cheese *to share* 14

steak & cheese sandwich
caramelised red onion, fries 12.5

framptons burger
beef, cheddar or blue cheese, streaky bacon,
caramelised red onion, fries 14

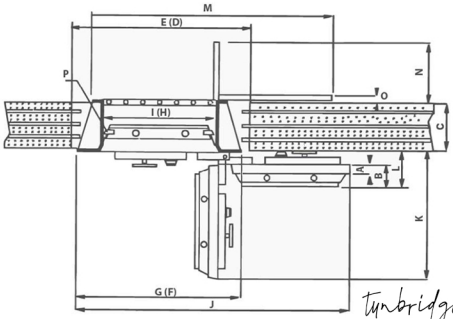

tunbridge wells